ANDREW® an Amphenol company

Installation Instructions

# Connectors Attachment

**For FSJ1-50A Coaxial Cable**
**SMA Male, Right Angle**
**High Frequency Connector: F1TSR**



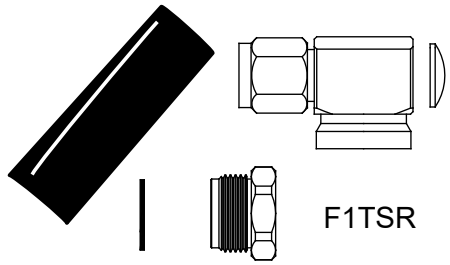


1

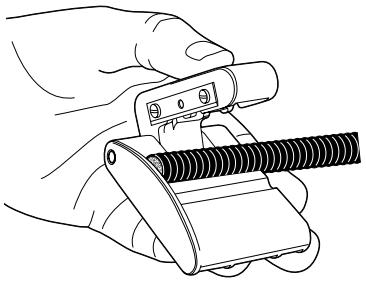

2

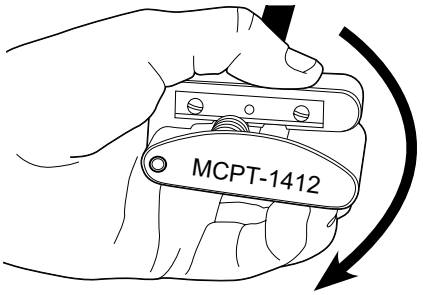


3

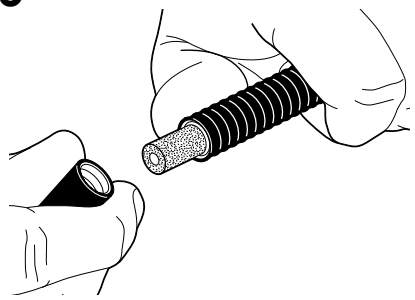

4

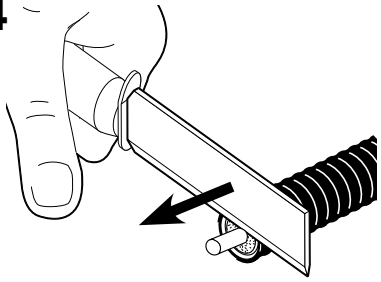

5

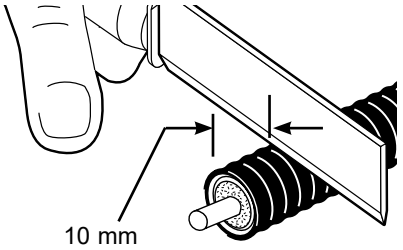


6

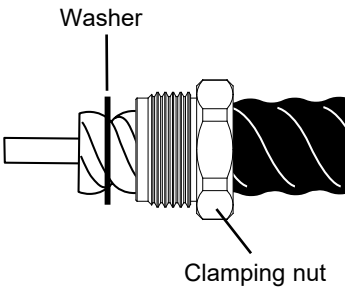


7

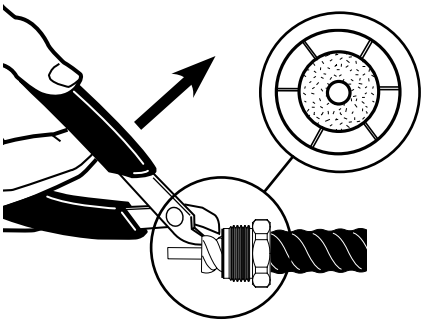

8

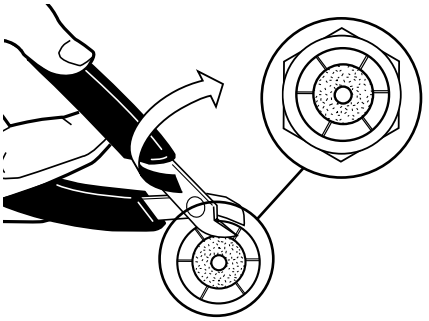

9

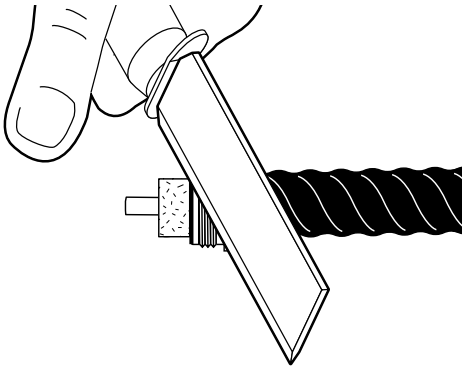

10

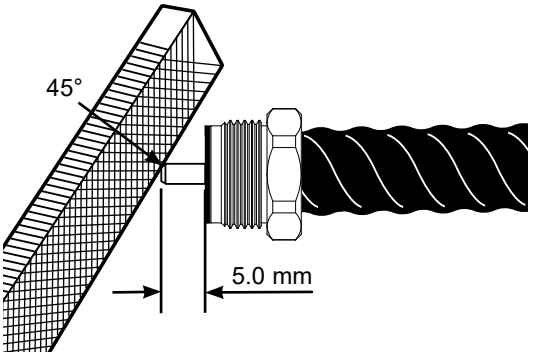


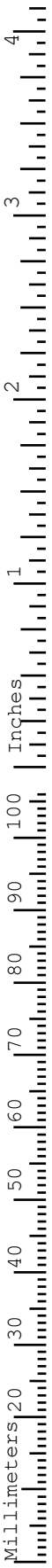

**11**

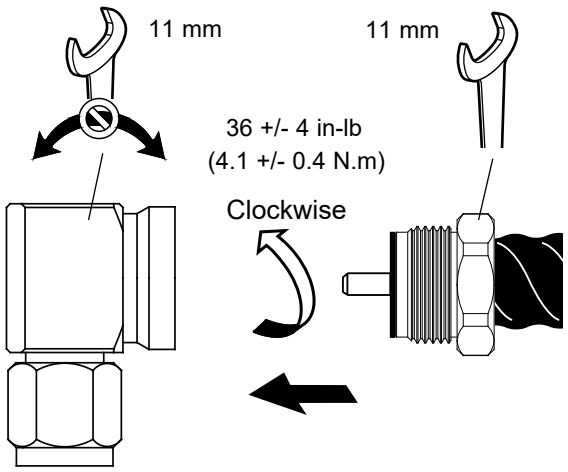


**12**

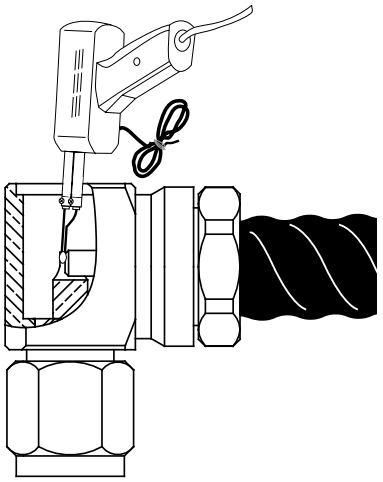

**13** Put the cap into the hole, then use a press or a hammer to press the cap tightly to avoid fall-off.

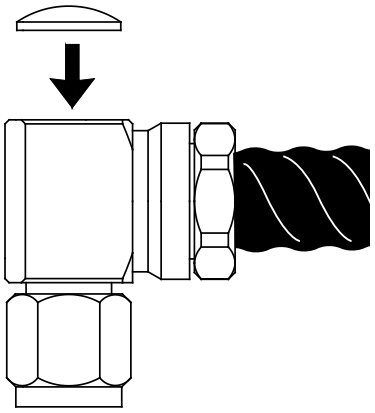

**14**

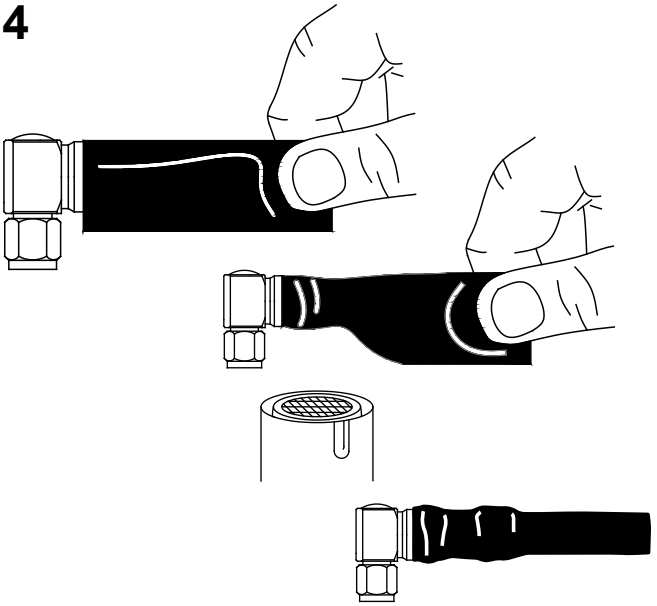

**15** Coupling torque.

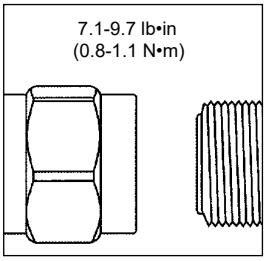


| 50 | 表一 有毒有害物质或元素名称及含量标识格式 | | | | | |
|---|---|---|---|---|---|---|
| | 有毒有害物质或元素 | | | | | |
| 部件名称 (Part Name) | 铅 (Pb) | 汞 (Hg) | 镉 (Cd) | 六价铬 (Cr6+) | 多溴联苯 (PBB) | 多溴二苯醚 (PBDE) |
| 连接器 (Connector) | X | O | O | O | O | O |

O: 表示有毒有害物质在该部件所有的均质材料中的含量均在SJ/T 11363-2006规定的限量要求以下.
X: 表示该有毒有害物质至少在该部件的某一均质材料中的含量超出SJ/T 11363-2006规定的限量要求.

**ANDREW an Amphenol company**
2601 Telecom Parkway, Richardson, Texas, 75082, USA
www.andrew.com

**Technical Support**
+1 888 297 6433, Option 3 (Toll Free US and Canada)
awpnarsupport@andrew.com

Notice: ANDREW disclaims any liability or responsibility for the results of improper or unsafe installation, inspection, maintenance, or removal practices.
Aviso: ANDREW no acepta ninguna obligación ni responsabilidad como resultado de prácticas incorrectas o peligrosas de instalación, inspección, mantenimiento o retiro.
Avis : ANDREW décline toute responsabilité pour les conséquences de procédures d'installation, d'inspection, d'entretien ou de retrait incorrectes ou dangereuses.
Hinweis: ANDREW lehnt jede Haftung oder Verantwortung für Schäden ab, die aufgrund unsachgemäßer Installation, Überprüfung, Wartung oder Demontage auftreten.
Atenção: A ANDREW abdica do direito de toda responsabilidade pelos resultados de práticas inadequadas e sem segurança de instalação, inspeção, manutenção ou remoção.
Avvertenza: ANDREW declina eventuali responsabilità derivanti dell'esecuzione di procedure di installazione, ispezione, manutenzione e smontaggio improprie o poco sicure.
注意：ANDREW 公司申明對於不恰當或不安全的安裝、檢驗、維修或拆卸操作所導致的后果不負任 何義務和責任

©2025 ANDREW, an Amphenol company. All rights reserved. Amphenol and ANDREW are registered trademarks of Amphenol and/or its affiliates in the U.S. and other countries. All product names, trademarks and registered trademarks are property of their respective owners.